1295 Morningside Avenue, Unit 16-18
Scarborough, ON M1B 4Z4 Canada
Phone: 416-261-4865 Fax: 416-261-7879
www.scigiene.com

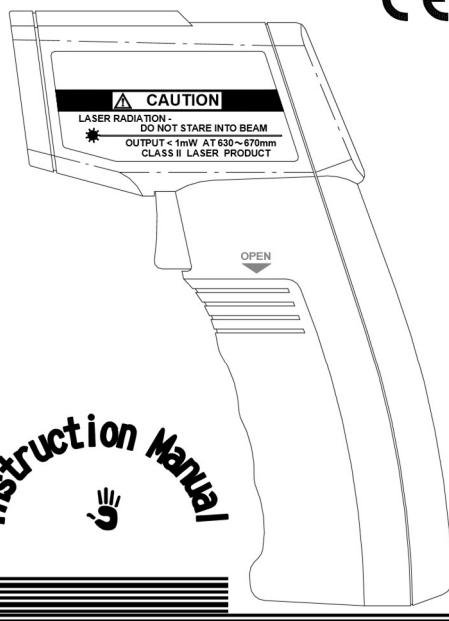

Instruction Manual

INFRARED THERMOMETER

CE

350-00 DEC. 2002

Instruction Manual

CONTENT Page

I. SAFETY INFORMATION ---------- 4 II.
CAUTIONS ---------- 4 III.
GENERAL SPECIFICATION ---------- 6
IV. NAME AND FUNCTION ---------- 7 V.
OPERATION INSTRUCTIONS:
Measuring Trigger ---------- 8
Distance to Spot Ratio (D/S) ---------- 8
Emissivity ---------- 9
Maintenance ----------10
Replace Battery ----------10

I. ⚠ SAFETY INFORMATION

- Read the following safety information carefully before attempting to operate or service the meter.
- Only qualified personnel should perform repairs or servicing not covered in this manual.
- Periodically wipe the case with a dry cloth. Do not use abrasives or solvents on this instrument.
- Safety symbols:


Dangerous, refer to this manual before using the meter.


Apply with European CE.

This instrument conforms to the following standards: **EN50081-1:** 1992 Electromagnetic Emissions

EN50082-1: 1997 Electromagnetic Susceptibility

Test were conducted using a frequency range of 80-1000 MHz with the instrument in three orientations. The average error for the three orientations is ± 2.0°C (±4.0°F) at 3V/m throughout the spectrum. However, between 300 MHz and 500 MHz at 3V/m, the instrument may not meet its stated accuracy.

Warning of laser!

Do not point laser directly at human eye or indirectly from reflective surfaces.

II. CAUTIONS

Before using the infrared thermometer you notice the following:

- Away from electrical welders, induction heaters and EMF sources.
- When using this thermometer under large or abrupt ambient temperature changes, allow 15 minutes for unit to stabilize before use.
- Do not keep this thermometer in the environment of high temperature for a long time.
- Keep away from dusty environment, and keep in carry case after operation to avoid contamination of optical lenses.

III. GENERAL SPECIFICATION

Display: 4 digit LCD

Display Illumination: Backlight by LED
Field of View: 8:1

Target Indicator: Laser spot

Emissivity: 0.98

Power Off: Automatic power-off after 10 seconds

Temperature Range: -20~500°C -4~932°F
Accuracy: ±2°C(4°F) or ±2% of reading
Resolution: 0.5°C / 0.5°F

Repeatability: Within ±1% of reading or ±1°C(2°F) **Storage Condition:** -10~60°C, 14~140°F, ≤ 75%RH

Operating Condition: 0~40°C, 32~104°F, 10~90%RH

Response time: 0.5 second

Battery: 9V battery, 006P, IEC6F22, NEDA1604

Battery Life: Approximately:15 hrs (Alkaline)

Dimension: 157.5x115x36mm,

17.5x4.5x1.4inch **Weight:** 180g Approx.

Accessory: 9V battery, instruction manual, carrying case

IV. NAME AND FUNCTION

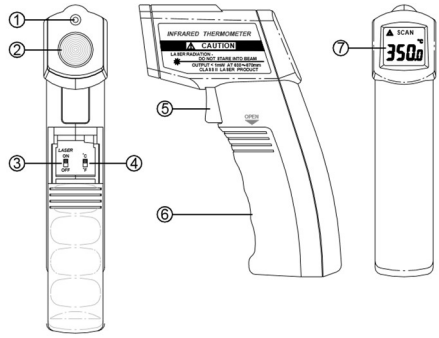

○1 Laser emitting hole ○2 Infrared sensor aperture
○3 Laser on/off switch ○4 °C/°F switch
○5 Measuring Trigger ○6 Battery cover
○7 LCD display

LCD Display

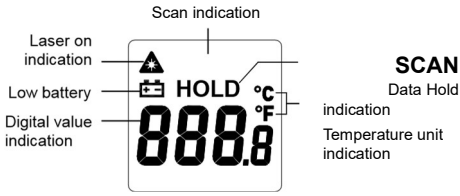

V. OPERATION INSTRUCTIONS

• Measuring Trigger

To measure a temperature, point the unit at an object and pull the trigger. Be sure to consider distance-to-spot size ratio and field of view. The laser is used for aiming the target for reference. The temperature reading will be updated on the LCD. When the operator releases the trigger, the reading will automatically be held on the LCD for 10 more seconds. After 10 seconds this thermometer will power down itself to save battery.

• Distance to Spot Ratio (D/S)

You have to make sure that the detection area you want to measure is larger than the required spot size to get a correct reading. The temperature you get is an average temperature of the detected region. The smaller the target, the shorter distance is required for the measuring.

(Please refer to the diagram on the side of the unit)

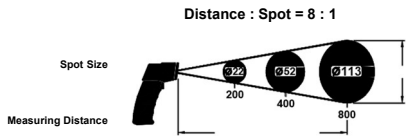

- **Emissivity**

Emissivity is a term used to describe the energy-emitting characteristics of materials. The higher of this value means the more capability of radiation emittance the materials has. Most organic materials and painted or oxidized surfaces have an emissivity of 0.98. Metal surfaces or shiny materials has a lower emissivity and give inaccurate readings. Please note this during

applications.

- **Maintenance**

Blow off loose particles using a lens blow. Gently brush remaining debris away with a lens brush. Carefully wipe the surface with a moist cotton swab. The swab may be moistened with water.
NOTE: Don't use solvents to clean the glass lens.

- **Replace Battery**

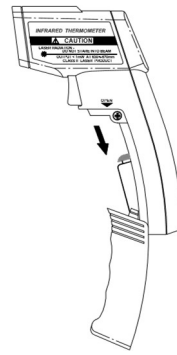

When the battery voltage drops below that required for reliable operation, the low battery symbol will appear, indicating it is the time to replace the battery.

To change the 9V battery, detach the battery compartment cover by pushing the engraved pattern on the handle and pull down. Change the 9V battery with new one and put the battery cover back

Scigiene
1295 Morningside Avenue, Unit 16-18
Scarborough, ON M1B 4Z4 Canada
Phone: 416-261-4865 Fax: 416-261-7879
www.scigiene.com